Regency Plateau® PTO30 Outdoor Decorative Gas Appliance

Owners & Installation Manual

Models: PTO30-NG1 / PTO30-LPG1
PTO30-ULPG1

LISTINGS AND CODE APPROVALS

These gas appliances have been tested in accordance with AS4565 / AS4558 and have been certified by the IAMPO Oceana for installation and operation as described in these Installation and Operating Instructions.

Your unit should be serviced annually by an authorised service person.

www.regency-fire.com

WARNING: FOR OUTDOOR USE ONLY

⚠ WARNING:
If the information in these instructions are not followed exactly, a fire or explosion may result causing property damage, personal injury or loss of life.

⚠ WARNING:
Improper installation, adjustment, alteration, service or maintenance can cause injury or property damage. Read the installation, operating and maintenance instructions thoroughly before installing or servicing this equipment.

Installation and service must be performed by a authorised installer, service agency or the gas supplier, in accordance with this manual

⚠ WARNING - FOR YOUR SAFETY
What to do if you smell gas:
- **Shut off gas to the appliance.**
- **Do not try to light any appliance.**
- **Extinguish any open flame.**
- **If odour continues, keep away from the appliance and immediately call your gas supplier or fire department.**
- **Do not touch any electrical switch: do not use any phone in your building.**
- **Immediately call your gas supplier from a neighbour's phone.**
- **Follow the gas supplier's instructions.**
- **If you cannot reach your gas supplier, call the fire department.**

⚠ WARNING:
Do not store or use gasoline or other flammable vapours and liquids in the vicinity of this or any other appliance.

***Installer*: Please complete the details on the back cover and leave this manual with the homeowner.**
***Homeowner:* Please keep these instructions for future reference.**

To the New Owner:

Congratulations!
You are the owner of a state-of-the-art Outdoor Decorative Gas Appliance by REGENCY®. The Plateau® PTO30 Outdoor decorative gas appliance has been designed to provide you with all the charm of a fire at the flick of a switch. The Plateau® PTO30 Outdoor Decorative Gas Appliance has been approved by IAPMO for both safety and efficiency. As it also bears our own mark, it promises to provide you with economy, comfort and security for many trouble free years to follow. Please take a moment now to acquaint yourself with these instructions and the many features of your Regency® decorative gas appliance.

DANGER

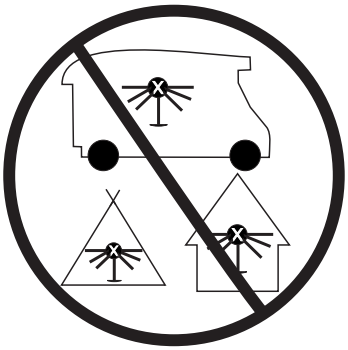

CARBON MONOXIDE HAZARD
This appliance can produce carbon monoxide which has no odor.

Using it in an enclosed space can kill you.

Never use this appliance in an enclosed space such as a camper, tent, car or home.

WARNING

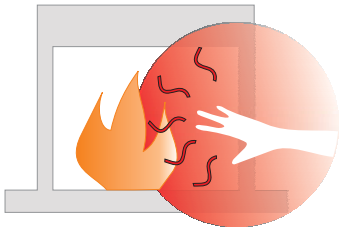

HOT GLASS WILL CAUSE BURNS

DO NOT TOUCH GLASS UNTIL COOLED

NEVER ALLOW CHILDREN TO TOUCH GLASS

ONE REGENCY
ONE TREE ™

TABLE OF CONTENTS

PTO30 finished table top and Unit Dimensions.....5
Important Message 6
Before You Start 6
General Safety Information.....6
Installation Checklist.....7
Locating Your Outdoor decorative gas appliance.....7
Minimum Clearances to combustibles.....8
Inner Framing dimensions (required) 9
Conversion from Ng to Lpg/ULPG.....10
Finishing 12
Optional finishing Trim.....12
Finishing Materials: 12
High Elevation 13
Gas Line Installation.....13
Pilot Adjustment.....13
Gas Pipe Pressure Testing.....13
886 S.I.T. Valve 13
Description.....13
Aeration Adjustment 13
PTO30 wall switch installation.....14
PTO30 Drain Installation (Recommended).....15
PTO30 Wiring Diagram 16
Table Cover Installation 17
Glass Crystal / Basalt volcanic stones installation 18
Glass surround Installation.....19
Operating Instructions 24
Lighting Procedure 24
Shutdown Procedure.....24
First Fire 24
Indoor storage of cylinders.....24
Identification for leaks 24
Copy of Lighting Plate Instructions.....25
Maintenance Instructions.....26
Valve assembly replacement.....27
Parts 28
Limited Warranty: 31

SAFETY LABEL

This is a copy of the label that accompanies each Plateau® Series Outdoor decorative gas appliance. We have printed a copy of the contents here for your review.

NOTE: Regency® units are constantly being improved. Check the label on the unit and if there is a difference, the label on the unit is the correct one.

Regency Gas Fireplace

Model	○	○	○
Gas Type	**NG**	**LPG**	**ULPG**
Model	**PTO30-NG**	**PTO30-LPG**	**PTO30-ULPG**
Gas Consumption	55mj/h	55mj/h	55mj/h
Manifold Pressure	0.87 kPa	2.49 kPa	2.49 kPa
Injector Size	1x#25	1x#45	1x#45

Approval # GMK10065
AS4558 / AS4565

Distributed by:

Western Australia:
Air Group Australia
28 Division St
Welshpool WA 6106

Eastern Australia:
Fireplace Products
Australia Pty. Ltd.
1 Conquest Way
Hallam, VIC 3803

To be installed by an authorised person in accordance with installation instructions provided with the appliance.

Electrical: Millivolt only | N2134 | Serial Number 395

919-081b

TO BE INSTALLED BY AN AUTHORISED PERSON

Primarily a decorative appliance - not certified as a space heater.

DO NOT OPERATE THIS APPLIANCE BEFORE READING THE INSTRUCTIONS BOOKLET.
DO NOT PLACE ARTICLES ON OR AGAINST THIS APPLIANCE
DO NOT USE OR STORE FLAMMABLE MATERIALS NEAR THIS APPLIANCE.
DO NOT SPRAY AEROSOLS IN THE VICINITY OF THIS APPLIANCE WHILE IN OPERATION.
DO NOT OPERATE WITH PANELS, COVERS OR GUARDS REMOVED FROM THIS APPLIANCE.
DO NOT ENCLOSE THIS APPLIANCE.
DO NOT MODIFY THIS APPLIANCE.

908-602b

THIS APPLIANCE SHALL NOT BE INSTALLED OR USED INDOORS

PTO30 FINISHED TABLE TOP AND UNIT DIMENSIONS

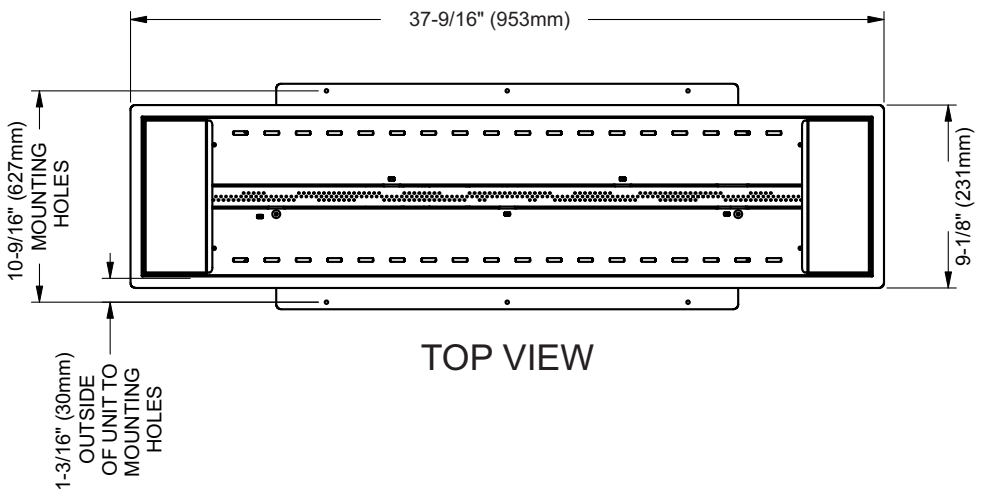

TOP VIEW

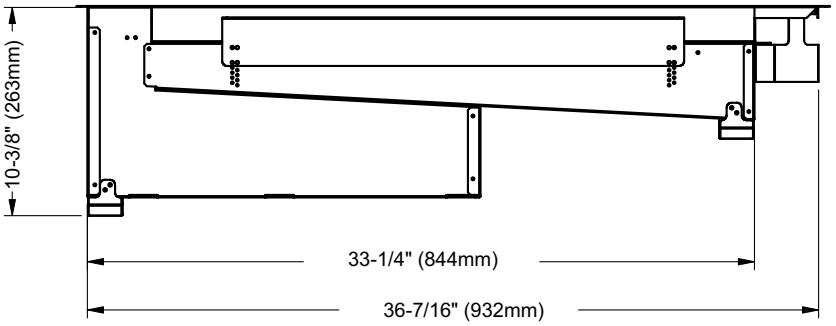

SIDE VIEW

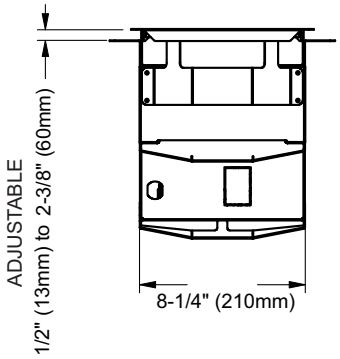

END VIEW

IMPORTANT MESSAGE SAVE THESE INSTRUCTIONS

The PTO30 Outdoor Decorative Gas Appliance must be installed in accordance with these instructions. Carefully read all the instructions in this manual first. Consult the "authority having jurisdiction" to determine the need for a permit prior to starting the installation. It is the responsibility of the installer to ensure this decorative gas appliance is installed in compliance with manufacturers instructions and all applicable codes.

BEFORE YOU START

Safe installation and operation of this appliance requires common sense, however, we are required by the Canadian Safety Standards and ANSI Standards to make you aware of the following:

INSTALLATION AND REPAIR SHOULD BE DONE BY AN AUTHORIZED SERVICE PERSON. THE APPLIANCE SHOULD BE INSPECTED BEFORE USE AND AT LEAST ANNUALLY BY A PROFESSIONAL SERVICE PERSON. MORE FREQUENT CLEANING MAY BE REQUIRED DUE TO EXCESSIVE LINT FROM CARPETING, BEDDING MATERIAL, ETC. IT IS IMPERATIVE THAT CONTROL COMPARTMENTS, BURNERS AND CIRCULATING AIR PASSAGEWAYS OF THE APPLIANCE BE KEPT CLEAN.

ANY GUARD OR OTHER PROTECTIVE DEVICE REMOVED FOR SERVICING THE APPLIANCE MUST BE REPLACED PRIOR TO OPERATING THE APPLIANCE

WARNING: FAILURE TO INSTALL THIS APPLIANCE CORRECTLY WILL VOID YOUR WARRANTY AND MAY CAUSE A SERIOUS FIRE.

CHILDREN AND ADULTS SHOULD BE ALERTED TO THE HAZARDS OF HIGH SURFACE TEMPERATURES, ESPECIALLY THE DECORATIVE GAS APPLIANCE GLASS AND FACEPLATE, AND SHOULD STAY AWAY TO AVOID BURNS OR CLOTHING IGNITION.

THIS APPLIANCE SHALL BE USED ONLY OUTDOORS IN A WELL-VENTILATED SPACE AND SHALL NOT BE USED IN A BUILDING, GARAGE OR ANY OTHER ENCLOSED AREA.

DO NOT USE THIS APPLIANCE IF ANY PART HAS BEEN UNDER WATER. IMMEDIATELY CALL A QUALIFIED SERVICE TECHNICIAN TO INSPECT THE APPLIANCE AND TO REPLACE ANY PART OF THE CONTROL SYSTEM AND ANY GAS CONTROL WHICH HAS BEEN UNDER WATER.

CLOTHING OR OTHER FLAMMABLE MATERIAL SHOULD NOT BE PLACED ON OR NEAR THE APPLIANCE.

SOLID FUELS SHALL NOT BE BURNED IN THIS APPLIANCE.

YOUNG CHILDREN SHOULD BE CAREFULLY SUPERVISED WHEN THEY ARE IN THE SAME AREA AS THE APPLIANCE. TODDLERS, YOUNG CHILDREN AND OTHERS MAY BE SUSCEPTIBLE TO ACCIDENTAL CONTACT BURNS. A PHYSICAL BARRIERS IS RECOMMENDED IF THERE ARE AT RISK INDIVIDUAL IN THE HOUSE. TO RESTRICT ACCESS TO A DECORATIVE GAS APPLIANCE OR STOVE, INSTALL AN ADJUSTABLE SAFETY GATE TO KEEP TODDLERS, YOUNG CHILDREN AND OTHER AT RISK INDIVIDUALS OUT OF THE ROOM AND AWAY FROM HOT SURFACES.

DO NOT SIT OR STAND ON DECORATIVE GAS APPLIANCE.

WARNING: APPLIANCES CONNECTED TO A FIXED GAS SUPPLY MUST BE RESTRAINED TO PREVENT DAMAGE OF THE GAS SUPPLY CONNECTIONS.

GENERAL SAFETY INFORMATION

1) The installation must conform with local codes or, in the absence of local codes, with *CAN/CSA-B149.1*, Natural Gas and Propane Installation Code or *CAN/CSA-B149.2*, Propane installation code the Natural Gas Fuel Code, *ANSI Z223.1/NFPA 54*.

2) See general construction and assembly instructions. The appliance should be enclosed.

3) Inspect the burner before each use of the appliance for blockage and any signs of deterioration

4) To prevent injury, do not allow anyone who is unfamiliar with the operation to use the decorative gas appliance.

5) Wear gloves and safety glasses for protection while doing required maintenance.

6) Maximum gas inlet pressure = 1/2 psig.

7) Under no circumstances should this appliance be modified. Parts that have to be removed for servicing should be replaced prior to operating this appliance.

8) Installation and any repairs to this appliance should be done by a qualified service person. A professional service person should be called to inspect this appliance annually. Make it a practice to have all of your gas appliances checked annually.

9) Under no circumstances should any solid fuels (wood, paper, cardboard, coal, etc.) be burned in this appliance.

10) The appliance and its individual shutoff valve must be disconnected from the gas supply piping system during any pressure testing of that system at test pressures in excess of 1/2 psi (3.5kPa).
The appliance must be isolated from the gas supply piping system by closing its individual manual shutoff valve during any pressure testing of the gas supply piping system at test pressures equal to or less than 1/2 psi (3.5 kPa).

11) The appliance area must be kept clear and free of combustible materials, (gases and other flammable vapours and liquids).

It is highly recommended to protect the interior from moisture (rain, snow). Cover the enclosure opening when not in use. This decorative gas appliance is only for use with the type of gas indicated on the rating plate. This decorative gas appliance is not convertible for use with other gases, unless a certified kit is used.

12) Stainless Steel/ Sunset Bronze Weather Cover **must** be removed when burner is in operation.

13) When not using appliance for extended periods of time - turn off gas supply and install Stainless Steel Weather Cover.

14) Appliances incorporation a live fuel effect, and designed with luminous flames, may exhibit slight carbon deposition.

Emissions from burning wood or gas could contain chemicals known to the State of California to cause cancer, birth defects or other reproductive harm.

INSTALLATION CHECKLIST

1) Locate appliance:

a) Refer to "Locating Your Outdoor decorative gas appliance" section
b) Clearances to Combustibles (Refer to "Clearances" section)
c) Framing & Finishing Requirements (Refer to "Framing & Finishing" section)

2) Drain Installation (recommended).

3) Install ON/OFF switch - ensure it is in the OFF position.

4) Make gas connections - test for leaks.

5) Install 4 "AA" batteries into each battery pack. This unit will not operate without AA batteries in place.

6) Install standard and optional features. Refer to the following sections:

a. Tabletop Installation
b. Glass Crystals
c. Volcanic Stone Installation (optional)
d. Glass Surround Installation
e. Weather Cover Installation

7) Final check.

This includes:

1) Clocking the appliance to ensure the correct firing rate (rate noted on label), after burning appliance for 15 minutes.

2) If required, adjusting the primary air to ensure that the flame does not carbon. First allow the unit to burn for 15-20 min. to stabilize.

CAUTION: Any alteration to the product that causes sooting or carboning that results in damage is not the responsibility of the manufacturer.

WARNING: DO NOT BUILD FRAME FOR HOUSING CYLINDER UNLESS COMPLIANCE TO AS 4565 AND AS/NZS 5601.1 ARE ASSURED.

THIS APPLIANCE MUST BE INSTALLED TO A PERMANENTLY CONNECTED NATURAL GAS PIPING SYSTEM, OR A PERMANENTLY CONNECTED PIPING SYSTEM TO A REMOTE LPG SUPPLY TANK

LOCATING YOUR OUTDOOR DECORATIVE GAS APPLIANCE

PTO30 BURNER MUST BE INSTALLED AT A MINIMUM OF 750MM ABOVE GROUND. IF INSTALLED LOWER, IT IS REQUIRED TO INSTALL THE DECORATIVE GLASS SURROUND AND ENSURE MINIMUM HEIGHT IS 750MM TO TOP OF GLASS SURROUND.
IF INSTALLED LOWER THAN 750MM WITH GLASS SURROUND, INSTALLER MUST PROVIDE A MEANS OF SECONDARY GUARD, NOT ATTACHED TO, BUT SURROUNDING THE PTO30 BURNER WITH A MINIMUM HEIGHT OF 750MM.

1) When selecting a location for your decorative gas appliance, ensure that the clearances are met.

2) This appliance must be installed in an open-air situation with natural ventilation, without stagnant areas, where gas leakage and products of combustion are rapidly dispersed by wind and natural convection.

3) Certain materials or items, when placed under or near the appliance, will be subjected to radiant heat and could become damaged.

4) Typically an outdoor space is not enclosed but, any enclosure in which the appliance is used shall comply with one of the following:

An enclosure with walls on all sides, but at least one permanent opening at ground level and no overhead cover.

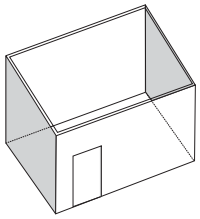

Within a partial enclosure that includes an overhead cover and no more that two walls.

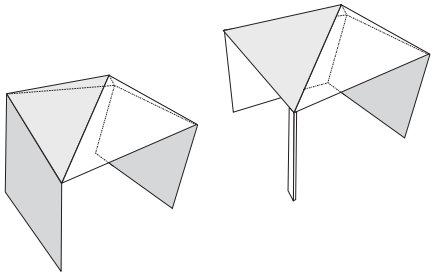

Within a partial enclosure that includes an overhead cover and more than two walls, the following shall apply:

- At least 25% of the total wall area is completely open, and
- At least 30% of the remaining wall area is open and unrestricted

30% or more in total of the remaining wall area is open and unrestricted.
In the case of balconies, at least 20% of the total wall area shall be and remain open and unrestricted.

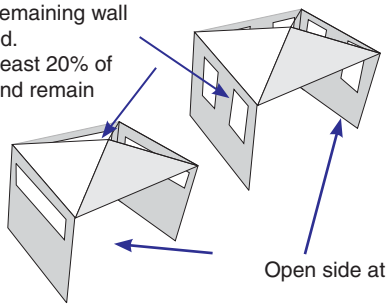

Open side at least 25% of total wall area

MINIMUM CLEARANCES TO COMBUSTIBLES

The clearances listed below are Minimum distances unless otherwise stated:

A major cause of fires is failure to maintain required clearances (air space) to combustible materials. It is of the greatest importance that this decorative gas appliance be installed only in accordance with these instructions.

Caution Requirements
The top, back and sides of the decorative gas appliance are defined by standoffs. The metal ends of the standoff may **NOT** be recessed into combustible construction.

WARNING
Fire hazard is an extreme risk if these clearances (air space) to combustible materials are not adhered to. It is of greatest importance that this decorative gas appliance be installed only in accordance with these instructions.

PTO30 Clearance Requirements

Clearance:	Dimension	Measured From:
A: Back wall	17" (432mm)	Burner to back wall
B: Sidewall	17" (432mm)	Burner to sidewall
C: Ceiling	45" (1143mm)	Burner to Ceiling
D: Unit Base	1"(25mm)	Unit Base to Combustible
E1: Alcove Width 30" **E2: Alcove Width 60"**	84"(2134mm) 100" (2540mm)	Wall to Wall (Minimum)
F: Alcove Depth	60" (1524mm)	Front to Back Wall (Maximum)
Notes:	0"	No Hearth Required

PTO30 BURNER MUST BE INSTALLED AT A MINIMUM OF 750MM ABOVE GROUND. IF INSTALLED LOWER, IT IS REQUIRED TO INSTALL THE OPTIMAL DECORATIVE GLASS SURROUND AND ENSURE MINIMUM HEIGHT IS 750MM TO TOP OF GLASS SURROUND.

IF INSTALLED LOWER THAN 750MM WITH GLASS SURROUND, INSTALLER MUST PROVIDE A MEANS OF SECONDARY GUARD, NOT ATTACHED TO, BUT SURROUNDING THE PTO30 BURNER WITH A MINIMUM HEIGHT OF 750MM.

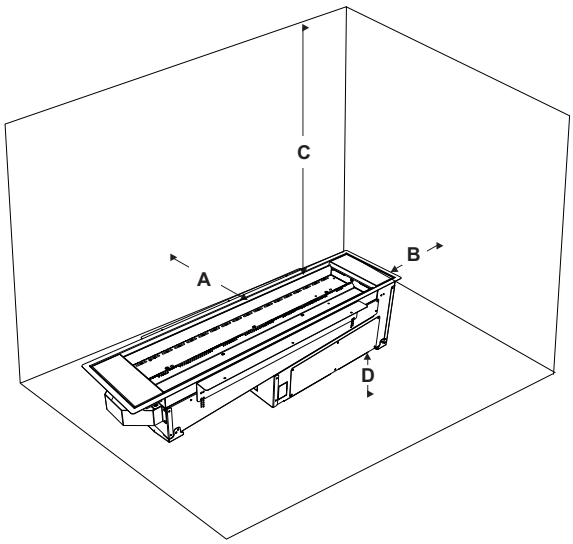

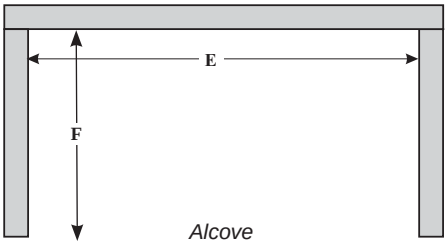

Alcove

INNER FRAMING DIMENSIONS (REQUIRED)

NOTE:FRAMING MATERIAL NOT SUPPLIED

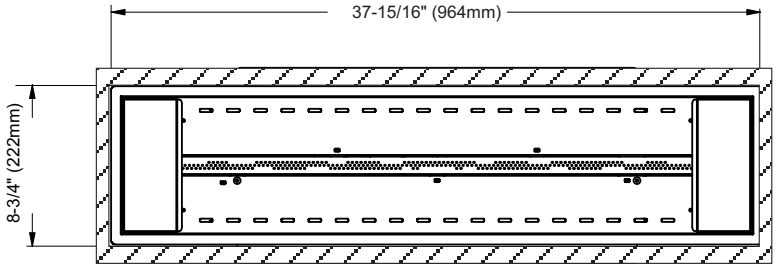

TOP VIEW

PTO30

NOTE: Framing materials must be non-combustible when used within 4" of the unit.
Combustible framing materials may be used outside the 4" clearance range.

Finishing materials **MUST** be non-combustible.

Consideration should be given to weather / elements when choosing framing materials (ie. treated lumber, steel stud).

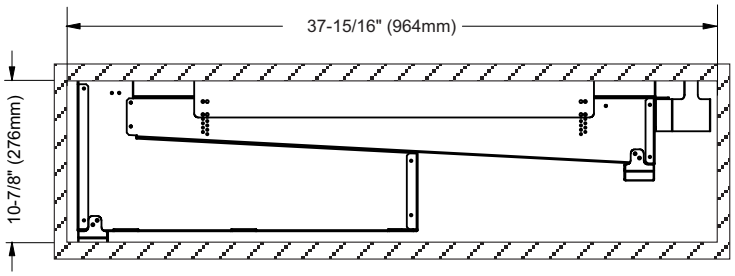

SIDE VIEW

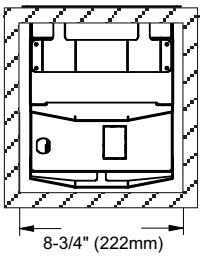

END VIEW

NOTE: PTO30 - Two (2) ventilation grills are required for all enclosures.
This is to alleviate moisture and allow for air to circulate. Minimum recommended size 20" sq (508 mm²) **ea**.

CONVERSION FROM NG TO LPG/ULPG

THIS CONVERSION MUST BE DONE BY A QUALIFIED GAS FITTER
IF IN DOUBT DO NOT DO THIS CONVERSION !!

Each Kit contains one LP Conversion Kit

Conversion Kit # 377-968 Contains:

Qty.	Part #	Description
1	904-655	Burner Orifice #45
1	904-529	5/32" Allen Key
1	918-590	Decal "Converted to LPG"
1	908-528	Red "LP / ULPG" label
1	911-009	Hi/Lo conversion LP / ULPG For 886
1	919-127	Instruction Sheet

rn the unit off and allow to cool to room temperature.
rn off gas supply.

Remove table top(if installed) by lifting up and off, use caution if glass surround is in place.

Remove glass crystals, garden stones and log set, if installed.

Locate and remove 2 screws at each end of burner assembly - see locations in Diagram 1 below.

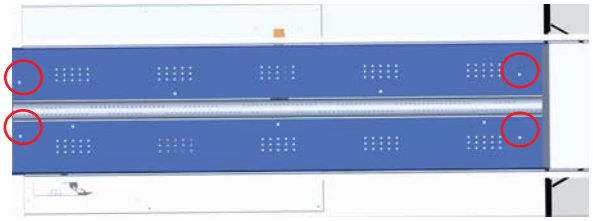

Slide burner away from burner orifice and lift up to remove burner assembly.

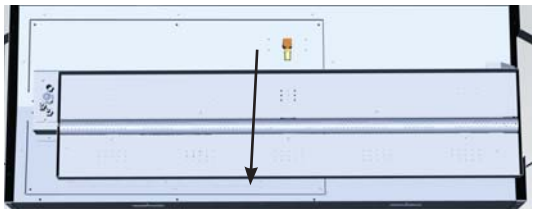

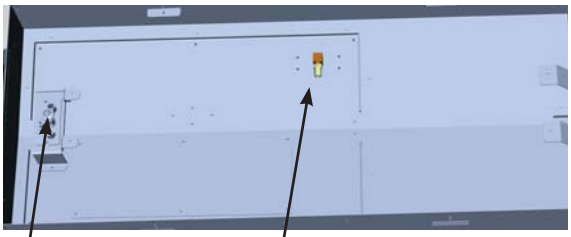

Burner orifice

Pilot Cap

5) Remove burner orifice with a 1/2" wrench. Use another wrench to hold on to the elbow behind the orifice. Discard orifice.
Repeat steps to install LPG/ULPG orifice.

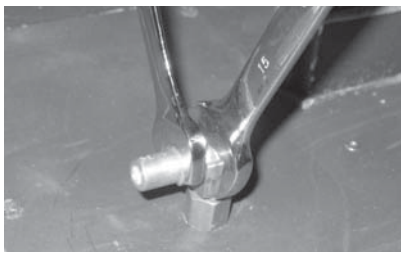

6) Pull off the pilot cap to expose the pilot orifice. Using a 5/32" allen key, remove pilot orifice and replace with LPG/ULPG pilot orifice.

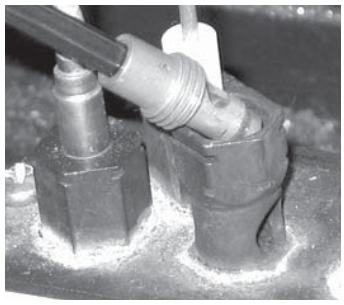

7) Re-install pilot cap.

8) Adjust aeration accordingly.- see manual for details.

9) Remove 6 screws on valve access cover.

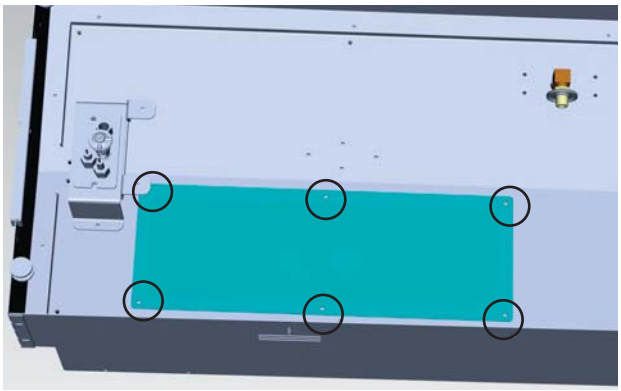

10) Remove Hi/Lo pressure regulator by removing 2 screws as shown below. Reverse steps to install LP pressure regulator. (Be sure diaphragm and spring are removed.)

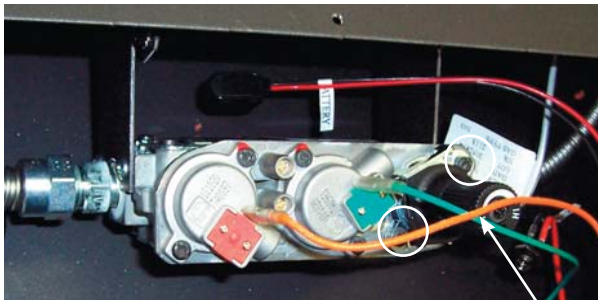

HI/LO pressure regulator

11) Attach the label “This unit has been converted to LPG/ULPG” near or on top of the serial # decal.

12) Replace yellow “NG” label with red “LPG/ULPG” label. Make appropriate gas connections.

13) Check all gas connections under normal operating pressure, for leaks, with soapy water.

NOTE: If soap bubbles, this would indicate a gas leak.

14) Check inlet and outlet pressures.

15) Check operation of flame control.

FINISHING

Side nailing strips are adjustable for material from a minimum of 1/2" thick up to a maximum of 2-3/8" thick.

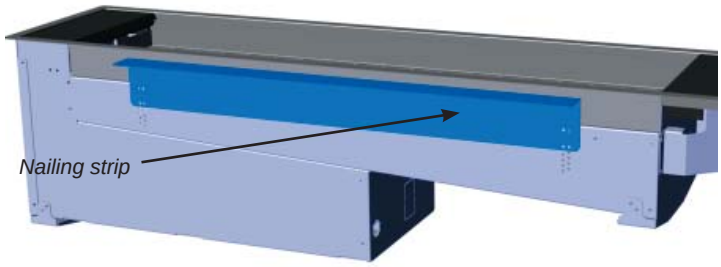

Side nailing strips are adjustable in 1/4" or 1/8" increments. Each hole on the inside line is 1/8", each hole on the outside line is 1/4"
Determine the thickness of the finishing material before adjusting the nailing strips.

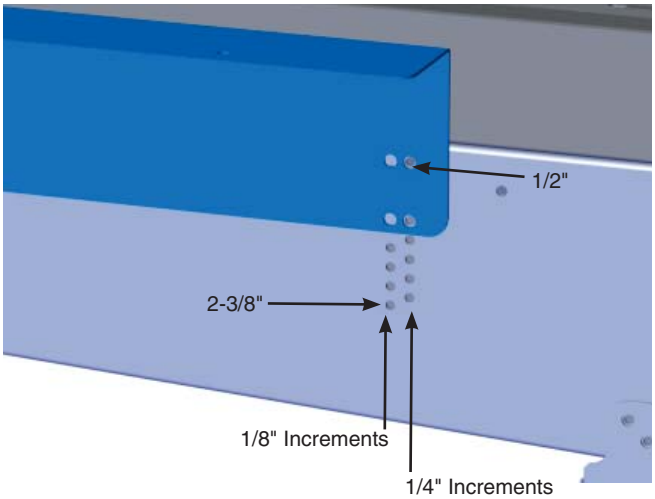

FINISHING MATERIALS:

This burner is designed to be finished with non-combustible materials (ie. tile, granite, marble, brick, etc.) with a minimum thickness of 1/2" to a maximum thickness of 2-3/8".

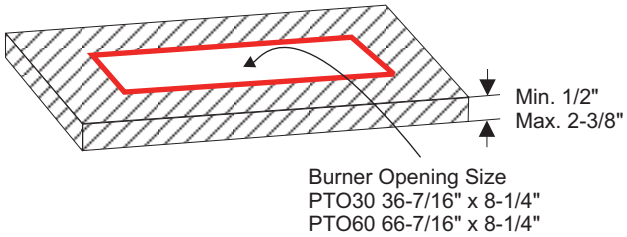

OPTIONAL FINISHING TRIM

Optional finishing trim is supplied with the PTO30 - place finishing trim on unit between unit and finishing material.

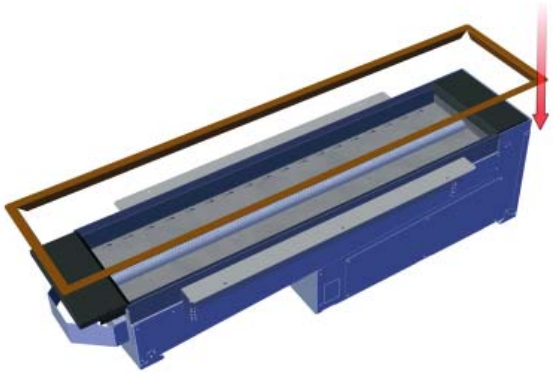

PTO30-NG SYSTEM DATA	
Max. Supply Pressure	14" WC (3.49 kpa)
Min. Supply Pressure	5" WC (1.25 kpa)
Manifold Pressure	3.5" WC (0.87 kpa)
Manifold Pressure -Low	1.6" WC (0.40 kpa)
Orifice Size	#25 DMS
Minimum Input	37 mj.
Maximum Input	55 mj.

PTO30-LPG / ULPG SYSTEM DATA	
Max. Supply Pressure	14" WC (3.49 kpa)
Min. Supply Pressure	11" WC (2.73 kpa)
Manifold Pressure	10" WC (2.49 kpa)
Manifold Pressure-Low	6.4" WC (1.59 kpa)
Orifice Size	#45 DMS
Minimum Input	40 mj.
Maximum Input	55 mj.

HIGH ELEVATION

This unit is approved for altitude 0 to 4500 ft. (CAN/CGA 2.17-M91) or AS/NZS 5601.1

GAS LINE INSTALLATION

Since some municipalities have additional local codes it is always best to consult with your local authorities and the CAN/CGA B149 installation code.

For USA installations follow local codes and/or the current National Fuel Gas Code, ANSI Z223.1.

When using copper or flex connectors use only approved fittings. Always provide a union so that gas lines can be easily disconnected for servicing. Flare nuts for copper lines and flex connectors are usually considered to meet this requirement.

NOTE: A shutoff / dante valve should be supplied in or near the unit (or as per local codes) for ease of servicing this appliance.

IMPORTANT: Always check for gas leaks with a soap and water solution or gas leak detector. Do not use open flame for leak testing.

Properly locate lines/hoses out of pathways or arches where the hose may be subject to damage.

Inspect hoses before each use and replace if evidence of excessive abrasion.

PILOT ADJUSTMENT

Periodically check the pilot flames. Correct flame pattern has two strong blue flames: 1 flowing around the flame sensor and 1 flowing across the burner (it does not have to be touching the burner).

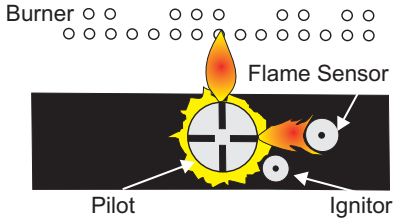

Note: If you have an incorrect flame pattern, contact your Regency® dealer for further instructions.

Incorrect flame pattern will have small, probably yellow flames, not coming into proper contact with the rear burner or flame sensor.

GAS PIPE PRESSURE TESTING

The appliance must be isolated from the gas supply piping system by closing its individual approved manual shut-off valve during any pressure testing of the gas supply piping system at test pressures equal to or less than 1/2 psig. (3.45 kPa). Disconnect piping from valve at pressures over 1/2 psig.

The manifold pressure is controlled by a regulator built into the gas control, and should be checked at the pressure test point.

Note: To properly check gas pressure, both inlet and manifold pressures should be checked using the valve pressure ports on the valve.

1) Make sure the valve is in the "OFF" position.

2) Loosen the "IN" and/or "OUT" pressure tap(s), turning counterclockwise with a 1/8" wide flat screwdriver.

3) Attach manometer to "IN" and/or "OUT" pressure tap(s) using a 5/16" ID hose.

4) Light the pilot and turn the valve to "ON" position.

5) The pressure check should be carried out with the unit burning and the setting should be within the limits specified on the safety label.

6) When finished reading manometer, turn off the gas valve, disconnect the hose and tighten the screw (clockwise) with a 1/8" flat screwdriver. ***Note: Screw should be snug, but do not over tighten.***

886 S.I.T. VALVE DESCRIPTION

1) Manual high/low adjustment
2) Pilot adjustment
3) Outlet Pressure Tap
4) Inlet Pressure Tap
5) Pilot Outlet
6) Main Gas Outlet
7) Main Gas Inlet

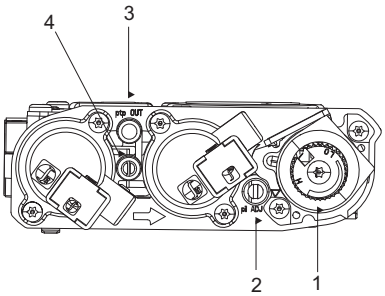

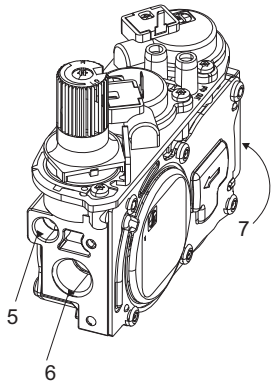

AERATION ADJUSTMENT

The burner aeration is factory set but may need adjusting due to either the local gas supply or altitude. Open the air shutter for a blue flame or close for a more yellow flame.

Minimum Air Shutter Opening:

Fully Closed	**NG**
1/2"	**LPG / ULPG**

Note: Any damage due to carboning resulting from improperly setting the aeration controls is NOT covered under warranty.

PTO30 WALL SWITCH INSTALLATION
(INCLUDED WITH UNIT)

The unit comes with low voltage wire and a battery extension wire installed.

1) Run supplied wire to desired location - to a max. of 9 feet.

2) Install supplied electrical box in desired location.

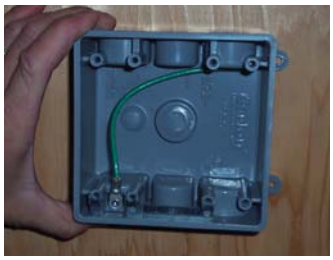

3) Remove center knock out from electrical box and install strain relief (strain relief nut not required).

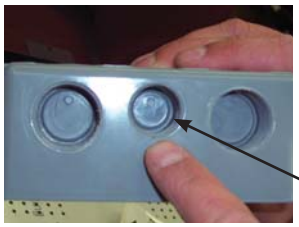

Center knock out

Strain Relief

4) Route low voltage wire and battery extension wire through the strain relief.

5) Connect low voltage wire to supplied switch, fasten switch to right side of electrical box (polarity not important).

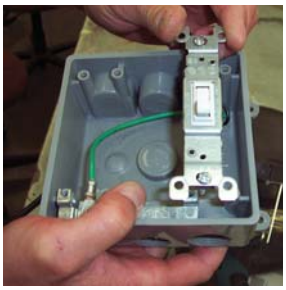

6) Install supplied 4-AA batteries into the battery holder. Using velcro install battery holder to the backside of the battery compartment door. Connect battery terminal.

7) Using silicone, completely seal strain relief to protect from water or moisture.

8) Place supplied gasket on top of electrical box.

9) Fasten cover to electrical box using supplied screws.

10) Place switch in OFF position until final installation is complete.

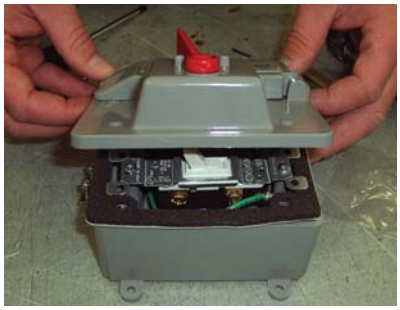

PTO30 DRAIN INSTALLATION (RECOMMENDED)

Although this decorative gas appliance is designed to operate outdoors safely, rain and other sources of moisture may enter the burner area, which will cause water to collect inside the base of the unit.

NOTE: The PT060 requires installation of 4 drains (two per PT030).

To prevent excessive water collection, the installer should provide a way to drain the water from the base of the unit by building or installing a water collector before positioning the decorative gas appliance in its location.

INSTALLATION INSTRUCTIONS

1. Remove 4 screws (2 each side) to remove the bracket from the bottom of the burner.

2. On the exposed drain hole (see location below), install a PVC 3/4" threaded coupling reducer going from the top of the pan, down through the hole. Apply a silicone-based sealant around the base and threads before installation. Cut notches into the top of the coupling reducer to prevent water pooling.

3. Holding the reducer coupling with a wrench, thread a 90° PVC elbow (from the underside of the unit) to the reducer until it is tight to the metal.

4) Reinstall bracket from Step 1.

5. Repeat steps 1-4 on bracket at other end of burner.

6. Apply a silicone based sealant to the bracket (along all edges).

Note: To assure proper drainage, the decorative gas appliance must be installed on a leveled surface

6. Add additional piping to route the drain to an appropriate location.

NOTE: Install two drains on both burners for the PTO60 (four total).

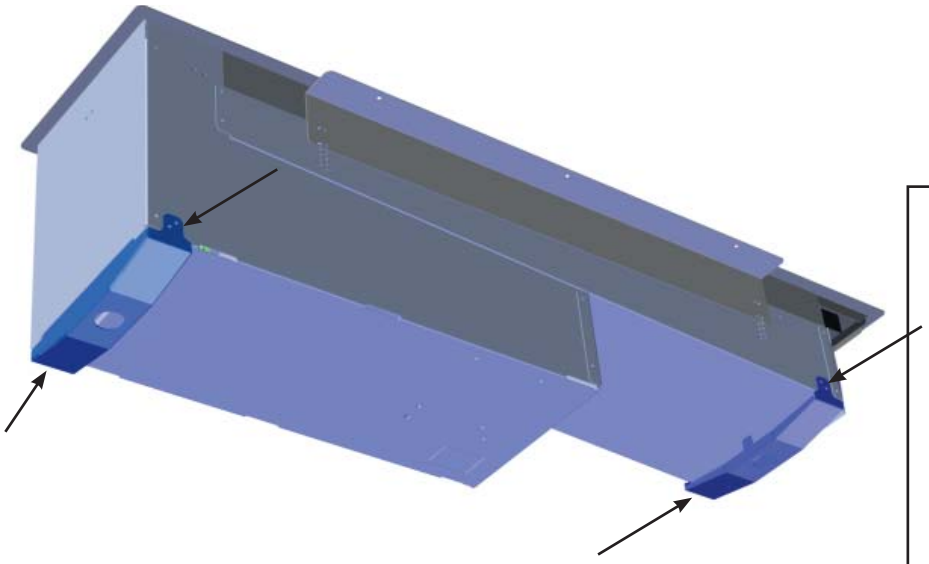

View from under-side of unit.

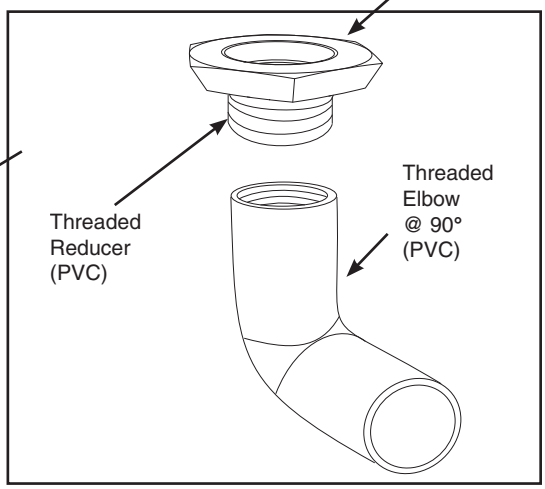

Reducer and elbow can be purchased from your local hardware store.

PTO30 WIRING DIAGRAM

This appliance does not require a 240V A.C. supply for operation.

NOTE: 4 AA batteries must be installed in the battery pack to operate the burner switch. Do not use a 9 volt battery.

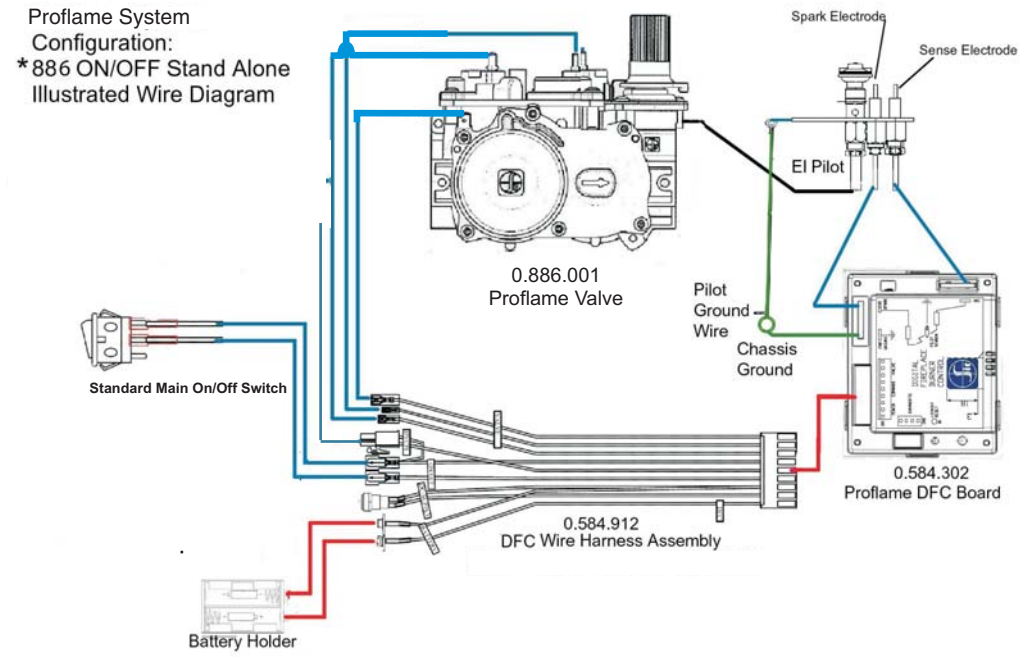

The appliance, when installed, must be electrically grounded in accordance with local codes, or in the absence of local codes with the *National Electrical Code, ANSI/NFPA 70,* if applicable.

TABLE COVER INSTALLATION

DINING LEAF
For all units:

1) Place the dining leaf cover over the burner of the unit when not in use.

GLASS CRYSTAL / BASALT VOLCANIC STONES INSTALLATION

Evenly spread the Glass Crystals and optional Basalt Volcanic Stones over the burner. Ensure the crystals (or stones) do not overlap too much as this will effect the flame pattern.

IMPORTANT NOTE:
Only the supplied approved Glass Crystals and Basalt Volcanic stones are to be used with these fireplaces. Use of any other type of glass crystals or stones can alter the unit's performance, any damage caused by the use of any unapproved glass or stones will not be covered under warranty.

When using Basalt Volcanic Stones DO NOT cover pilot light that lead to pilot flame.

BURNER PACKAGES		
Unit	**Glass Crystals Only**	***Glass Crystals + Volcanic stones[1]**
PTO30	10 lbs	5lb glass + 1 box stones- recommended
PTO60	20lbs	10lb glass + 2 boxes - recommended
NOTE: * Glass Crystals are available in 1lb and 5lb bags. [1] Glass Crystals to be installed on the burner prior to installing stones. Basalt Volcanic Stones are measured by weight not quantity. Each bag contains 15 lbs of stones, however the exact quantity and size vary. Sizes vary between 2" - 3"		

1. Start pouring Crystals on one end of the burner.

2. Work Crystals to other end of the Burner. Base and burner tube should not be visible when crystals are spread out.

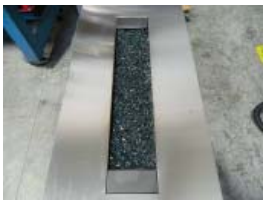

3. Work Crystals downwards to front edge of top edge of burner.

4. Basalt Volcanic Stones shown spread evenly over the burner and crystal base.

5. Ensure Crystals do not block the front of the pilot hood and flame to light the burner.

NOTE: *Correct final glass installation of Crystals as shown in step 2 and 3.*
The Burner should not be visible when the flame is out.

NOTE: Basalt Volcanic Stones are <u>NOT</u> to be placed anywhere on the Pilot assembly area.
Glass Crystals to be installed on the burner prior to installing stones.

GLASS SURROUND INSTALLATION

THE GUARD IS FITTED TO THIS APPLIANCE TO REDUCE THE RISK OF FIRE OR INJURY FROM BURNS AND NO PART OF IT SHOULD BE PERMANENTLY REMOVED.
FOR PROTECTION OF YOUNG CHILDREN OR THE INFIRM , A SECONDARY GUARD IS REQUIRED.

1. Remove metal fasteners from the corner brackets.

2. Assemble the 4 pieces of the glass surround/windshield and fasten together with 4 corner top brackets and supplied nylon fasteners as shown below.

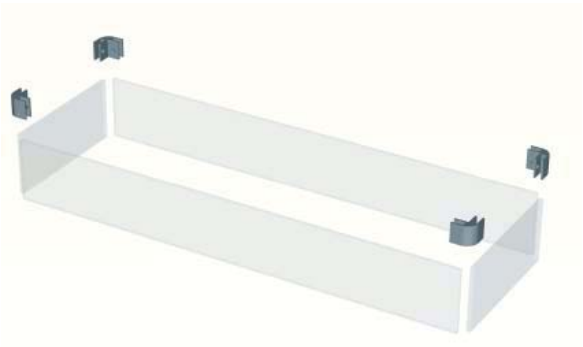

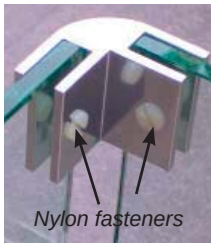

3. Using a flat screwdriver, secure 4 top corner brackets with nylon fasteners in each corner, bracket should be flush with the top of glass as shown below.

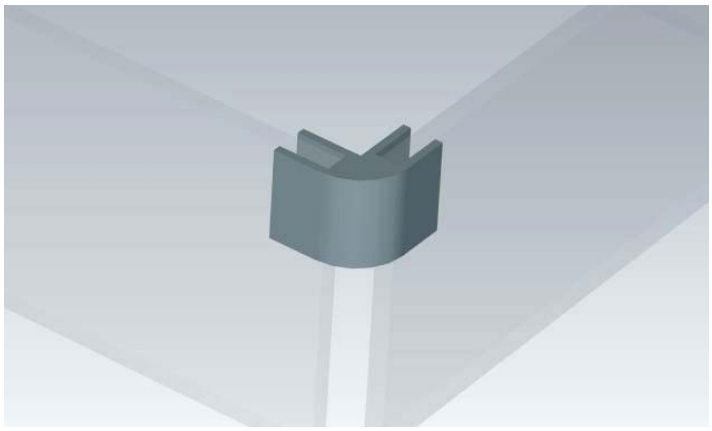

4a. After the 4 top brackets are installed - flip over and place on a soft surface, to install the 4 bottom brackets.

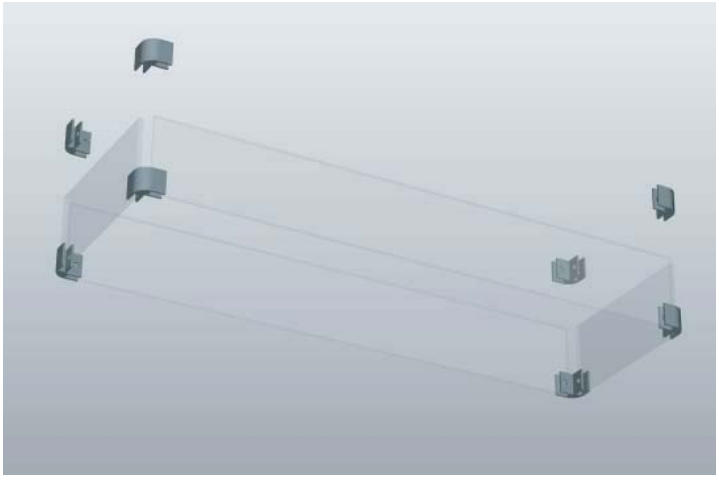

4b. Use supplied spacer tool to determine where the bottom bracket should be placed and secured.

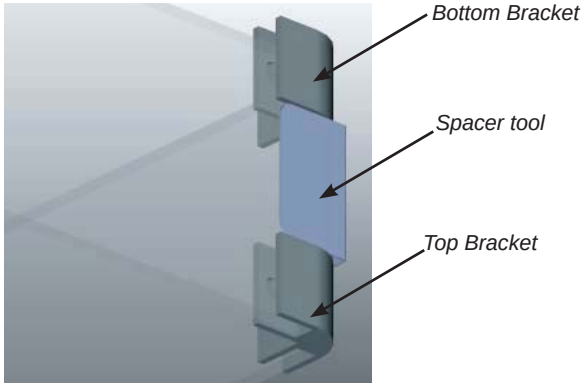

5. Secure bottom corner brackets with nylon fasteners in each corner.

6. Flip the glass back over and place on a soft surface. The glass is now right side up. The glass should be raised up 1/2" in bracket as shown below.

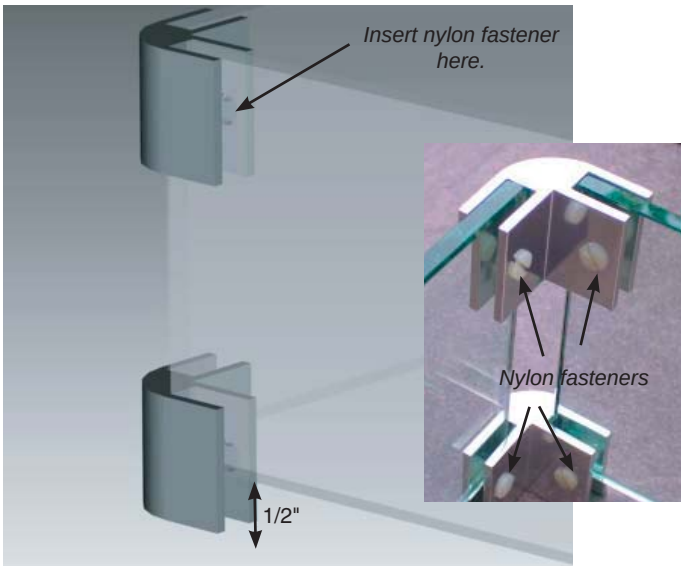

7. Place assembled glass surround/windshield on table top - ensure glass is centered on the table top. Once in correct position, lift up one end, apply double sided tape that has been cut to size, to the bottom of the brackets. Repeat process on other end. Press down firmly from to secure glass surround/windshield in position. Use care not to scratch surfaces.

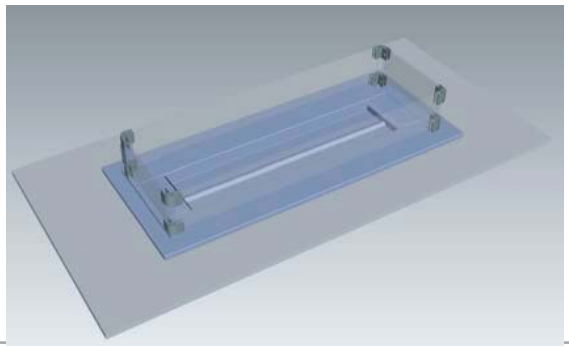

ASSEMBLY INSTRUCTIONS FOR A STEEL STUD SEE THROUGH FRAMING KIT FOR PTO30

PTO30 BURNER MUST BE INSTALLED AT A MINIMUM OF 750MM ABOVE GROUND. IF INSTALLED LOWER, IT IS REQUIRED TO INSTALL THE DECORATIVE GLASS SURROUND AND ENSURE MINIMUM HEIGHT IS 750MM TO TOP OF GLASS SURROUND. IF INSTALLED LOWER THAN 750MM WITH GLASS SURROUND, INSTALLER MUST PROVIDE A MEANS OF SECONDARY GUARD, NOT ATTACHED TO, BUT SURROUNDING THE PTO30 BURNER WITH A MINIMUM HEIGHT OF 750MM.

INSTALL ON 200MM (MINIMUM) MASONRY RISER OR SIMILAR; OR,
INSTALL ON 50MM (MINIMUM) MASONRY RISER OR SIMILAR WITH THE 'GLASS SURROUND.

Follow these instructions to construct a steel stud see through frame for the PTO30 burner;
Overall dimensions =64-1/16" (1627mm) W x 51"(1295mm) H x 19" (483mm)D .
**Non-combustible finishing board not supplied with kit. Board may be purchased at your local hardware/building supply store.
IMPORTANT: Supplied vents need to be installed into non-combustible finishing board, before applying finishing materials. Follow guidelines included with these instructions.

Tools Required	
1 power drill + #2 phillips bit	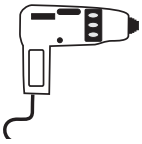
1 hand #2 screwdriver (Phillips)	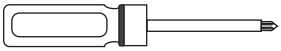
1 level	
1 tape measure	

377-908 CONTENTS:	
Top / Bottom	(A) x 2
Vertical Supports - Tall	(B) x 8
Vertical Supports - Short	(C) x 6
Base	(D) x 1
Short Brace	(E) x 4
Header	(F) x 2
Vents	4
Wafer Screws	80

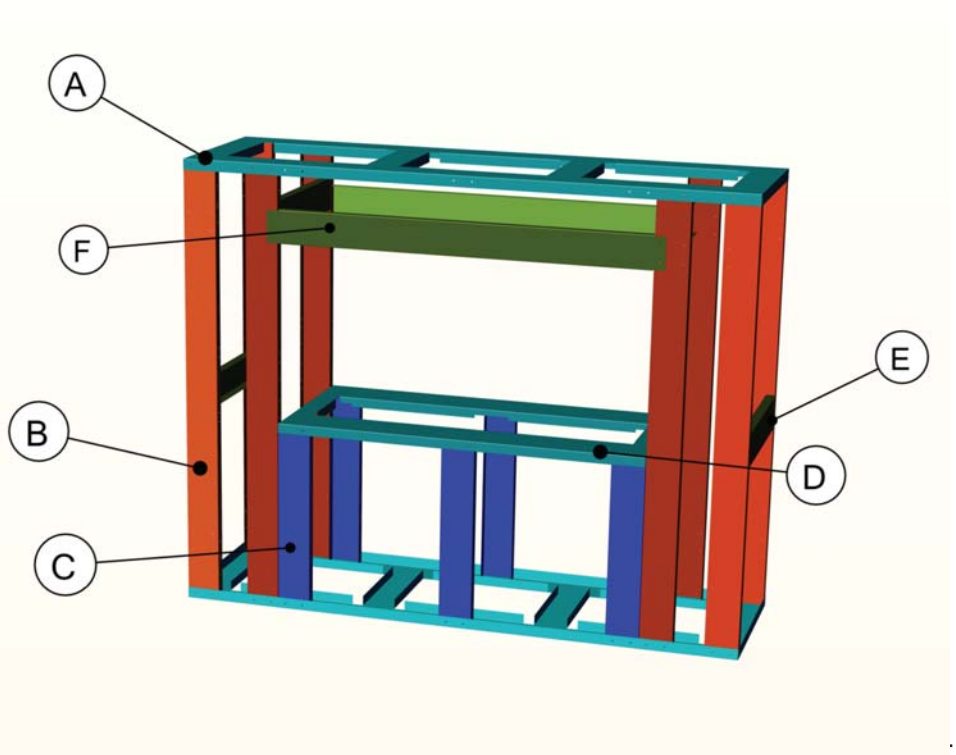

NOTE: IF THE BURNER HAS BEEN CONVERTED TO LPG, THE CYLINDER CANNOT BE INSTALLED WITHIN THE FRAMING KIT, AND MUST BE CONNECTED VIA A PERMANENT PIPING SYSTEM TO A REMOTE LPG SUPPLY TANK

NOTE: If using framing unit with original version of PTO30 (not -1), cut base in areas shown below and fold down to allow room for the larger size.

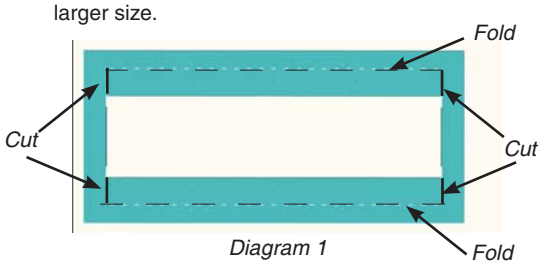

Diagram 1

1. Attach six (6) short vertical supports (Part C) to base (Part D) with two (2) screws for each support - twelve (12) screws total. Do not install corner screws.

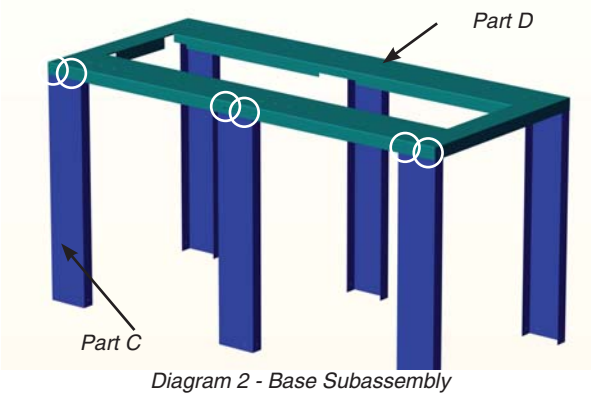

Diagram 2 - Base Subassembly

2. Rest subassembly and inner tall vertical supports (Part B) on lower frame (Part A).

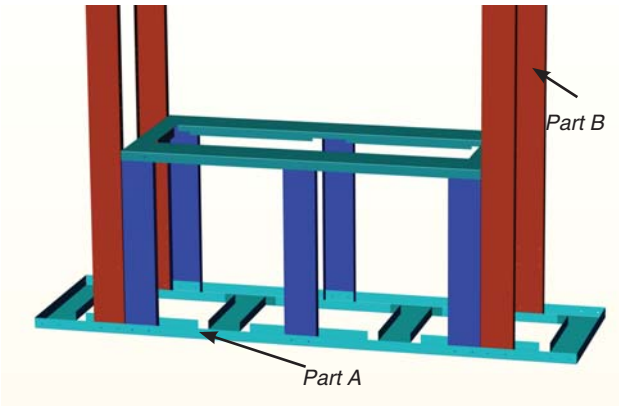

Diagram 3

3. Attach inside tall vertical supports (Part B) to short vertical supports (Part C) with one (1) screw each.

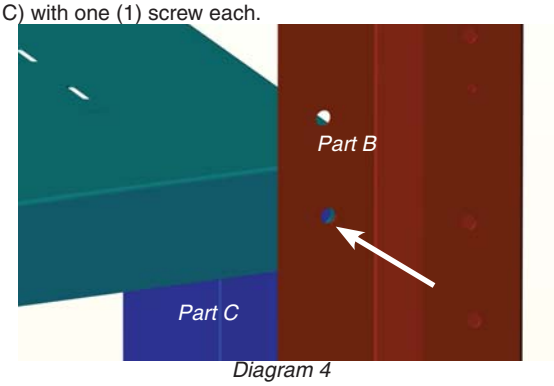

Diagram 4

4. Secure all vertical supports (Part B) with two (2) screws each to lower frame (Part A).

5. Place top frame (Part A) on inside tall vertical supports (Part B).

6. Secure in place with two (2) screws for each support

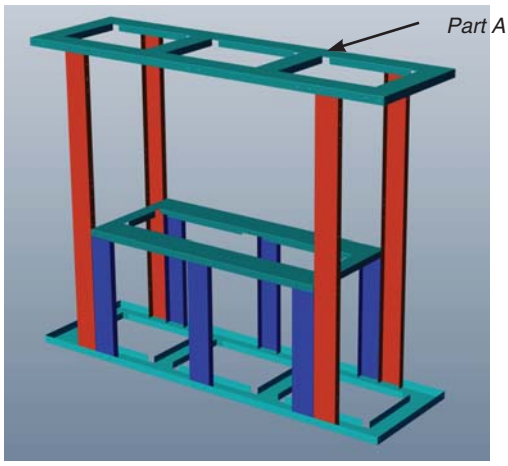

Diagram 5 - Top Frame

7. Manoeuvre in outside tall vertical supports (Part B).

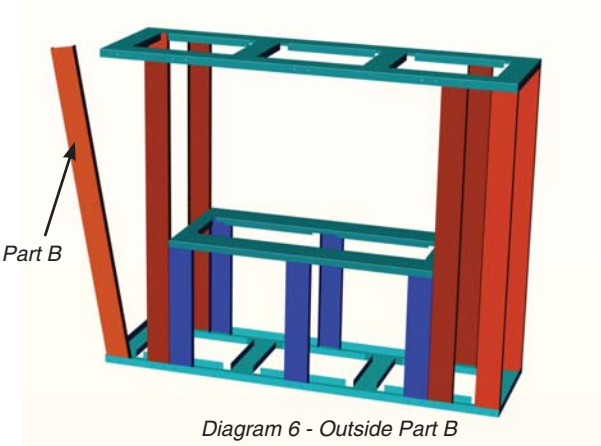

Diagram 6 - Outside Part B

8. Secure all tall vertical supports (Part B) to Top and Bottom Frame (Part A) with three (3) screws each,

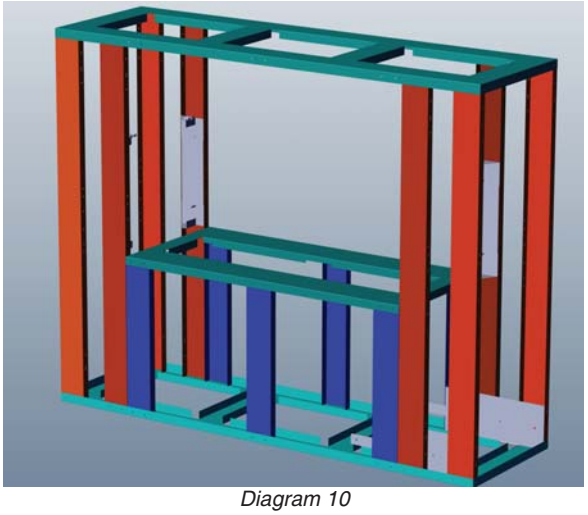

Diagram 10

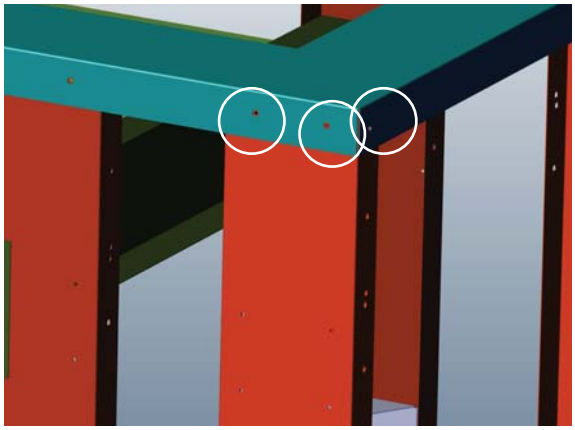

Diagram 11 - Screw Locations

9. Install four(4) short horizontal supports (Part E) - using four (4) screws for each support.

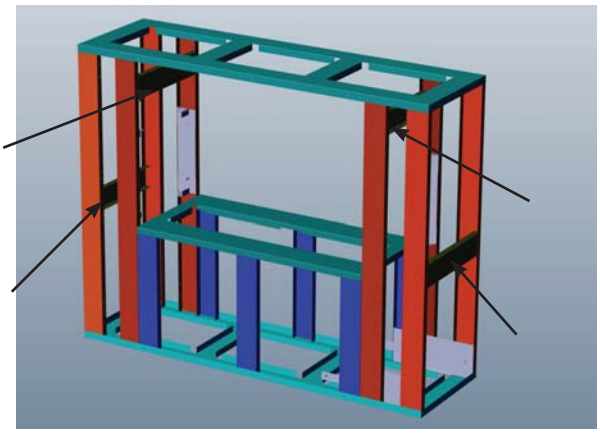

Diagram 12 - Part F locations

10. Install two (2) headers (Part F) with four (4) screws each to complete frame installation

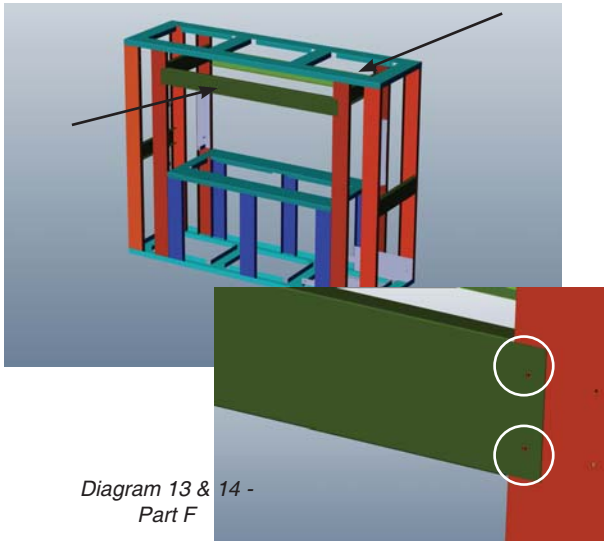

Diagram 13 & 14 - Part F

If installing optional panels - continue on to next section.

OPTIONAL PANELS:

1. Bend tabs on top flange of side panel to 90º.

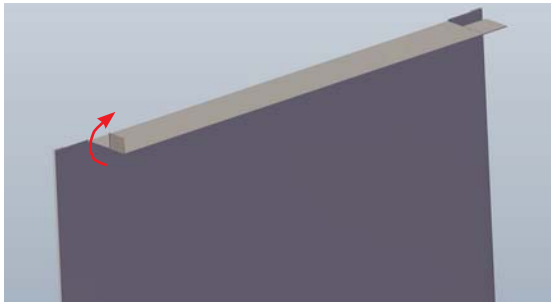

Diagram 1 - Bend tabs to 90º

2. Position panel - lower tabs line up with indents in base.

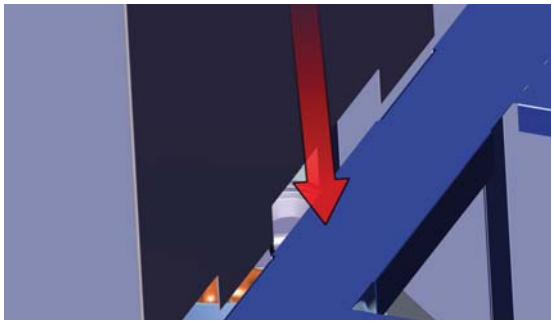

Diagram 2 - Lower tabs on panel aligned with base

3. Bend tabs flat, the side panel will then be supported to allow the installation of the top panel.

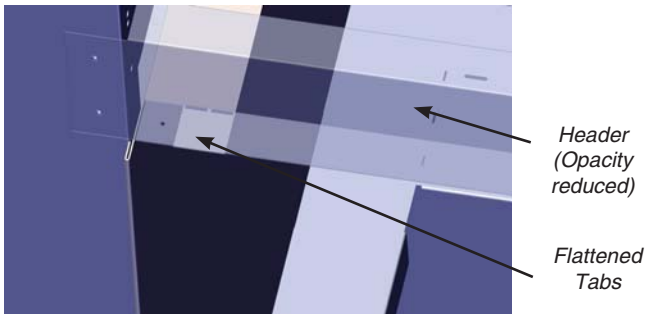

Diagram 3 - Bend tabs flat, panels is supported on headers.

4. Install top panel with six (6) screws in locations shown below.

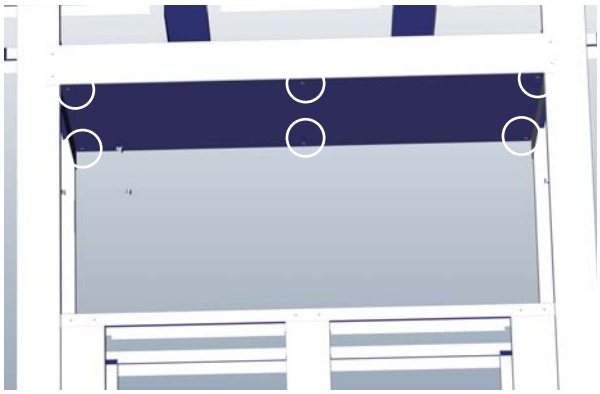

Diagram 2 - Top Panel screw locations

OPERATING INSTRUCTIONS

1) Read and understand these instructions before operating this appliance.

2) Check to see that all wiring is correct and enclosed to prevent possible shock.

3) Check to ensure there are no gas leaks.

4) Check all hoses and connections.

5) The unit should never be turned off, and on again without a minimum of a 60 second wait.

LIGHTING PROCEDURE

1) Turn on ON/OFF switch.

2) After approximately 4 seconds the spark ignition system will spark for 60 seconds to light the main burner.

3) The unit will turn on.

Note: The first try for ignition will last approximately 60 seconds. If there is no flame ignition (rectification) the board will stop sparking for approximately 35 seconds. After wait time , the board will start second try for ignition by sparking for approximately 60 seconds . If there is still no positive ignition the board will go into lock out.

The system will need to be reset as follows:

a) Turn the system off using ON/OFF switch.
b) After approximately 2 seconds turn on ON/OFF switch.
c) Unit will repeat step 2.

SHUTDOWN PROCEDURE

1) Turn ON/OFF switch.

2) If service is to be performed - you must disconnect power to the unit, by removing the battery pack.

FIRST FIRE

The first fire in your decorative gas appliance is part of the paint curing process. To ensure that the paint is properly cured, it is recommended that you burn your decorative gas appliance for at least one (1) hours the first time you use it
.
When first operated, the unit will release an odour caused by the curing of the paint, the burning off of any oils remaining from manufacturing.

DO NOT ATTEMPT TO CLEAN THE GLASS WHILE IT IS HOT.

INDOOR STORAGE OF CYLINDERS

1) There is no limitation on the storage of appliance indoors provided that the cylinder is removed from the appliance.

2) Storage of an appliance indoors with the cylinder attached is only permitted if the size of the cylinder complies with AS/NZS 1596: otherwise cylinder must be stored outdoors in a well ventilated area.

WARNINGS/ IDENTIFICATION FOR LEAKS

1) Certain combustible materials under or near the appliance will be subject to radiant heat and could be seriously damaged.

2) Inspect all hose assemblies before each use.

3) Check all hose assemblies for wear. Replace if required.

4) Check all connections with soap and water, clean after as some detergents are corrosive.

5) Check all connection, fitting, hoses prior to each use.

COPY OF LIGHTING PLATE INSTRUCTIONS

The lighting plate is located on the underside of the table top on the unit.

FOR YOUR SAFETY READ BEFORE LIGHTING

This appliance must be installed in accordance with local codes, if any; if none, follow the National Fuel Gas Code, ANSI Z223.1/NFPA 54, or Natural Gas and Propane Installation Codes, CSA B149.1.

WARNING: If you do not follow these instructions exactly, a fire or explosion may result causing property damage, personal injury or loss of life. Improper installation, adjustment, alteration, service or maintenance can cause injury or property damage. Refer to the owner's information manual provided with this appliance. For assistance or additional information consult a qualified installer, service agency or gas supplier.

AVERTISSEMENT. Quiconque ne respecte pas à la lettre les instructions dans la présente notice risquede déclencher un incendie ou une explosion entraînant des dommages, des blessures ou la mort.

Une installation, d'ajustement, de modification, de service ou d'entretien peut provoquer des blessures ou des dommages matériels. Reportez-vous au manuel du propriétaire de l'information fournie avec cet appareil. Pour obtenir de l'aide ou des informations supplémentaires consulter un installateur qualifié, une agence de service ou fournisseur de gaz.

A) This appliance is equipped with an ignition device which automatically lights the pilot. Do not try to light the pilot by hand.

B) BEFORE OPERATING smell all around the appliance area for gas. Be sure to smell next to the floor because some gas is heavier than air and will settle on the floor.

WHAT TO DO IF YOU SMELL GAS

- Do not try to light any appliance.
- Do not touch any electric switch, do not use any phone in your building.
- Immediately call your gas supplier from a neighbours phone. Follow the gas supplier's instructions.
- If you cannot reach your gas supplier, call the fire department.

A) Cet appareil est muni d'un dispositif d'allumage qui allume automatiquement la veilleuse. Ne tentez pas d'allumer la veilleuse manuellement.

B) AVANT DE FAIRE FONCTIONNER, reniflez tout autour de l'appareil pour déceler une odeur de gaz. Reniflez près du plancher, car certains gaz sont pluslourds que l'air et peuvent s'accumuler au niveau du sol.

QUE FAIRE SI VOUS SENTEZ UNE ODEUR DE GAZ :

- Ne pas tenter d'allumer d'appareil
- Ne touchez à aucun interrupteur; ne pas vous servir des téléphones se trouvant dans le bâtiment.
- Appelez immédiatement votre fournisseur de gaz depuis un voisin. Suivez les instructions du fournisseur.
- Si vous ne pouvez rejoindre le fournisseur, appelez le service des incendies

CAUTION:
Hot while in operation. Do not touch. Severe Burns may result. Due to high surface temperatures keep children, clothing and furniture, gasoline and other liquids having flammable vapors away. Keep burner and control compartment clean. See installation and operating instructions accompanying appliance.

LIGHTING INSTRUCTIONS

STOP! Read the safety information on this label.

1) Turn on ON/OFF switch
2) After approximately 4 seconds the spark ignition system will spark for 60 seconds to light the main burner.
3) The unit will turn on.

Note: The first attempt to ignition will last approximately 60 seconds. If there is no flame ignition (rectification) the board will stop sparking for approximately 35 seconds. After this wait time, the board will start a second try for ignition by sparking for approximately 60 seconds. If there is still no positive ignition after the second attempt the board will go into lock out.
The system will need to be reset as follows (after going into lock out mode):

a) Wait 5 minutes - turn the system off using ON/OFF switch.
b) After approximately 2 seconds turn on ON/OFF switch.
c) Unit will repeat step 2.

1) Appuyez le bouton ON / OFF
2) Attendre 4 secondes. Le système d'allumage produira des étincelles pendant 60 secondes afin d'amorcer le brûleur principal.
3) Les flammes s'allumeront.

Remarque : Au premier allumage, le système tente d'allumer les flammes pendant 60 secondes. Si l'essai est infructueux, le système fait une pause de 35 secondes. C'est ce qu'on appelle l'étape de rectification. Ce délai écoulé, le système tente à nouveau d'allumer les flammes en produisant des étincelles pendant 60 secondes. Si les flammes ne s'allument toujours pas, le système se met en mode verrouillage.
Il faut alors le réinitialiser en suivant les étapes ci-dessous (pour le déverrouiller) :

a) Attendre 5 minutes et éteindre l'appareil en réglant l'interrupteur à la position « OFF »;
b) Attendre 2 secondes et rallumer le système à l'aide de l'interrupteur.
c) L'unité répétera l'étape 2.

TO TURN OFF GAS APPLIANCE

1) Turn off ON/OFF switch
2) If service is to be performed - you must disconnect power to the unit, from the battery pack, refer to manual

1) Appuyez sur le bouton ON / OFF
2) Si le service est effectuée, vous devez débrancher l'appareil, du bloc-piles, voir le manuel d'instruction pour plus de détails.

DO NOT REMOVE THIS INSTRUCTION PLATE

918-892a

MAINTENANCE INSTRUCTIONS

1) Always turn off the gas valve and unplug the batteries before cleaning. For relighting, refer to lighting instructions. Keep the burner and control compartment clean by brushing and vacuuming at least once a year. When cleaning the logs, use a soft clean paint brush as the logs are fragile and easily damaged.

2) Clean off leaves etc. before burning.

3) Clean appliance with a damp cloth (never when unit is hot). Never use an abrasive cleaner. The glass should be cleaned with a outdoor decorative gas appliance glass cleaner.

4) Hand and finger marks should be cleaned off with a soft cloth and a stainless steel cleaner. Most stainless steel cleaners leave a film/ residue on the surface of the panels. Use an ammonia based cleaner (ie. glass cleaner) to remove this film before applying heat to the unit. Failure to do this will result in burn stains on panels which you will be unable to remove.

5) The heater is finished in a heat resistant paint and should only be refinished with heat resistant paint. Regency® uses StoveBright Paint - Metallic Black #6309.

6) Make a periodic check of burner for proper position and condition. Visually check the flame of the burner periodically, making sure the flames are steady; not lifting or floating. If there is a problem, call a qualified service person.

7) Do not use this appliance if the valve and/or electronic components have been or are submerged under water. Immediately call a qualified service technician to inspect the appliance and to replace any part of the control system and any gas control which has been under water. This is not covered under the terms of the warranty policy.

8) Verify operation after servicing.

VALVE ASSEMBLY REPLACEMENT

Turn the unit off and allow to cool to room temperature.

1) Remove table top by lifting up and off, use caution if glass surround is in place.

2) Remove glass crystals, garden stones and logset, if installed.

3) Locate and remove 2 screws at each end of burner assembly - see locations in Diagram 1 below.

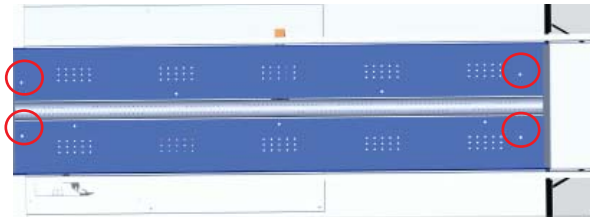

4) Slide burner forward (if pilot is on the left) off of the burner orifice and lift up to remove burner assembly.

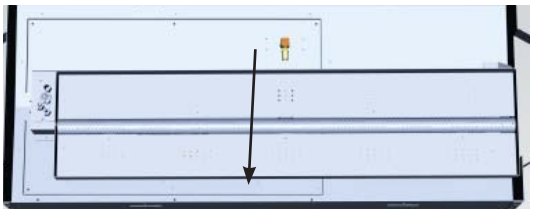

5) Remove 6 screws on valve access cover.

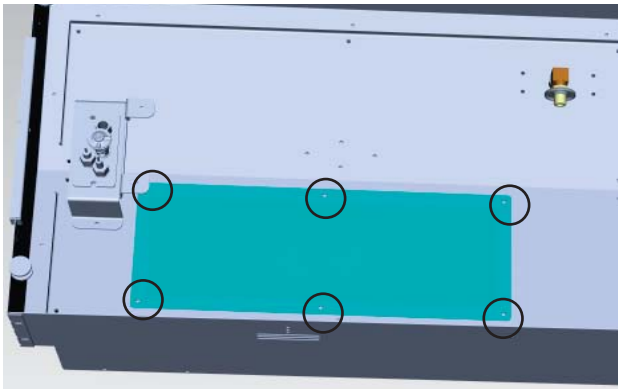

6) Turn off gas supply and remove flex connection at valve.

7) Remove orange EV1 wire connected to the gas valve.

8) Remove green EV2 wire connected to the gas valve.

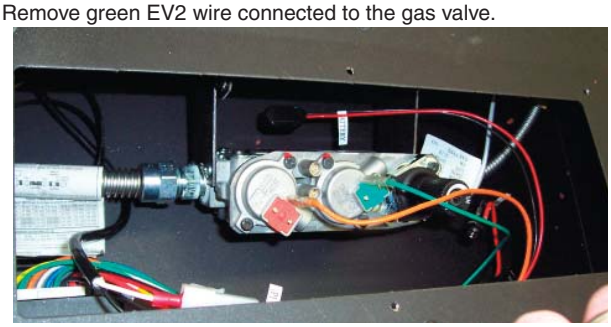

9) Remove 10 screws securing valve assembly.

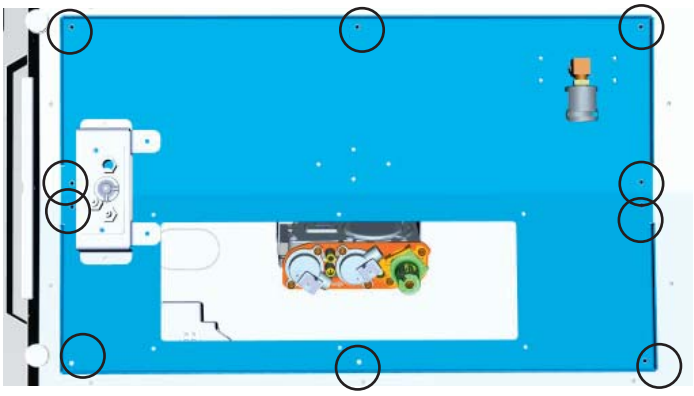

10) Lift valve assembly up and out.

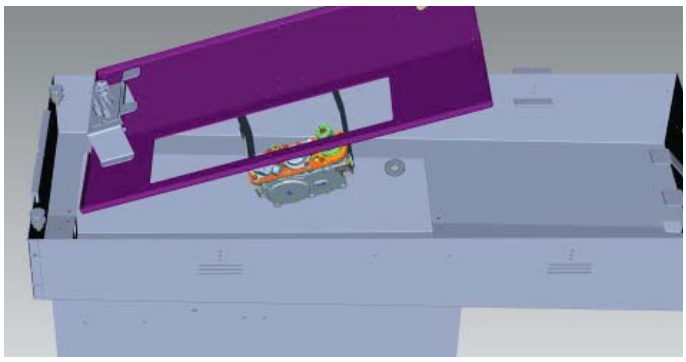

11) Remove both yellow/green ground wires from valve and valve bracket.

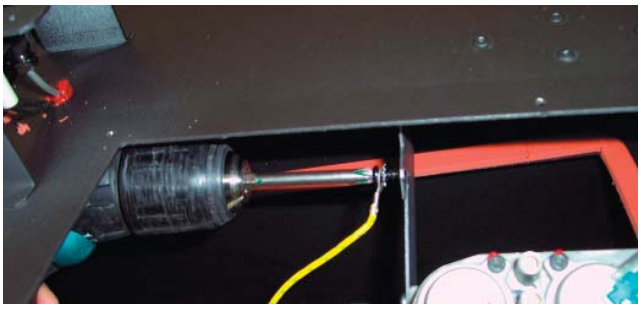

12) Replace valve assembly gasket if necessary.

13) Rotate HI/LO modulationg valve all the way to the left for HI position.

14) Install new valve assembly and reverse steps 11-1.

15) Test gas connections for leaks.

PARTS

	Part #	Description		Part #	Description
1	377-024	Burner Tray	9	376-526	Burner
2	377-035	Finishing Trim	10	377-045	Firebox
3	377-026	Mounting Bracket	11	377-046	Controls Enclosure
4	377-034	Pilot Shield	12	377-510	Valve Tray
5	377-027	Burner Mount	13	377-047	Components Cover
6	377-028	Burner Tray End	14	377-048	Pilot Shield support
7	377-030	Offset Bracket	15	377-054	Drainage Bracket
8	376-512	Electronic Assembly			

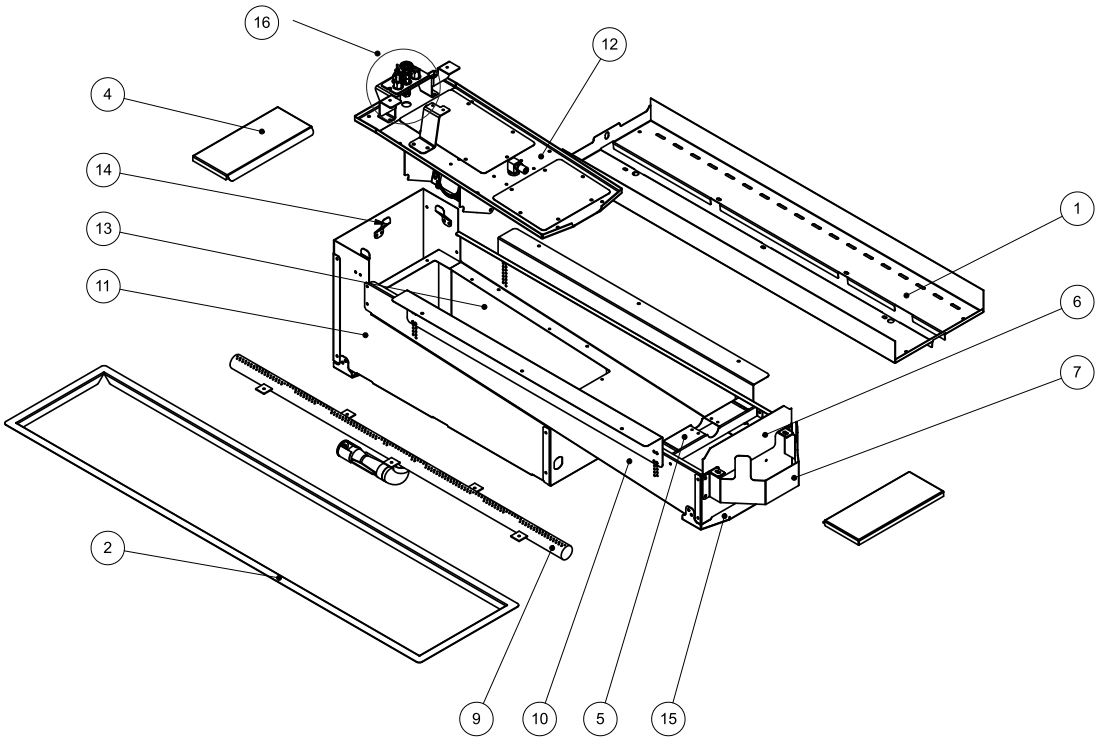

NOTES

Regency® Fireplace Products are designed with reliability and simplicity in mind. In addition, our internal Quality Assurance Team carefully inspects each unit thoroughly before it leaves our facility. FPI Fireplace Products International Ltd. is pleased to extend this limited warranty to the original purchaser of a Regency® Product. This warranty is not transferable.

Limited Warranty:

The combustion chamber is covered for parts and subsidized labour only, against defect in manufacture only, for a period of (5) five years from date of purchase.

The gas valve, burner tube, pilot assembly, flame sensor, electrode , control modules, switches and wiring for battery compartment are all covered for (1) one years on parts and (1) one year on labor only against defect in manufacture, from date of purchase.

Ceramic logs, spa and garden stones, glass crystals, and tempered glass wind shield carry a (1) one year warranty against manufacturing defect, on parts, with no labor allowance, from date of purchase.

Specials finishes such as stainless steel components are not covered against environmental damage, including corrosion, misuse, cleaning or handling issues that cause discoloration. To receive consideration any damage claim against stainless steel components must be submitted at the time of installation. Damage from abrasive cleaners is not covered under warranty. Damage reported after installation will not be covered.

Repair/replacement parts purchased by the consumer from FPI after the original coverage has expired on the unit will carry a 90 day warranty, valid with a receipt only. Any item shown to be defective will be repaired or replaced at our discretion. No labor coverage is included with these parts.

Conditions:
All installations must be performed by a qualified gas fitter and installed according to all applicable local and national codes. Also, all service work must be carried out by a qualified gas service person provided by the selling dealer. It is the responsibility of the installer to ensure that the appliance is firing as per rating plate. Any part or parts of this unit which in our judgement show evidence of such defect will be repaired or replaced at Regency®'s option, through an accredited distributor or agent provided that the defective part be returned to the distributor or agent **Transportation Prepaid,** if requested. In areas where there is not an approved service agent or the closest approved service agent is situated more than thirty (30) kilometres from the installation, Regency is not obliged to arrange warranty repairs and travel and/or additional labour charges will apply.

Porcelain/Enamel - Absolute perfection is neither guaranteed nor commercially possible. Any chips must be reported and inspected by an authorised dealer within three days of installation. Reported damage after this time will be subject to rejection.

It is the general practice of Regency® to charge for larger, higher priced replacement parts and issue credit once the replaced component has been returned to Regency and evaluated fro manufacturer defect.

At all time Regency reserves the right to inspect product in the field which is claimed to be defective.

All claims must be submitted to Regency® by authorised selling dealers. It is essential that all submitted claims provide all of the necessary information including customer name, purchase date, serial #, type of unit, problem, and part or parts requested, without this information the warranty will be invalid.

Exclusions:
This limited Warranty does not extend to or include paint, door or glass gasketing or trim.

Batteries are not covered under warranty policy.

At no time will FPI be liable for any consequential damages which exceed the purchase price of the unit. FPI has no obligation to enhance or modify any unit once manufactured. ie. as products evolve, field modifications or upgrades will not be performed.

FPI will not be liable for travel costs for service work.

Installation and environmental problems are not the responsibility of the manufacturer and therefore are not covered under the terms of this warranty policy.

Any unit which shows signs of neglect or misuse is not covered under the terms of this warranty policy.

The warranty will not extend to any part which has been tampered with or altered in any way, or in our judgment has been subject to misuse, improper installation, negligence or problems caused by environmental or geographical conditions, inadequate ventilation.

Freight damage to stoves and replacement parts is not covered by warranty and is subject to a claim against the freight carrier by the dealer.

FPI will not be liable for acts of God, or acts of terrorism, which cause malfunction of the appliance.

Malfunction | damage of this appliance due to mother nature (wind, rain, snow, etc.) is not covered under the terms of the warranty policy.

Performance problems due to operator error will not be covered by this warranty policy.

Products made or provided by other manufacturers and used in conjunction with the operation of this appliance without prior authorization from FPI, may create a danger and nullify your warranty on this product.

Any alteration to the unit which causes sooting or carboning that results in damage to the interior / exterior facia is not the responsibility of FPI.

** Subsidy according to job scale as predetermined by FPI.*

Register your Regency® warranty online
www.regency-fire.com.au

Reasons to register your product online today!

- View and modify a list of all your registered products.
- Request automatic email notification of new product updates.
- Stay informed about the current promotions, events, and special offers on related products.
- Help assure you get the most out of your warranty.
- Eliminate confusion and frustration if warranty** service is required in the future.

** Proof of purchase required at time of warranty request.

Installer: Please complete the following information

Dealer Name & Address:_____

_____

Installer: _____

Phone #: _____

Date Installed: _____

Serial No.:_____

Regency, Regency Plateau are trademarks of FPI Fireplace Products International Ltd.
© Copyright 2014, FPI Fireplace Products International Ltd. All rights reserved.

Printed in Canada